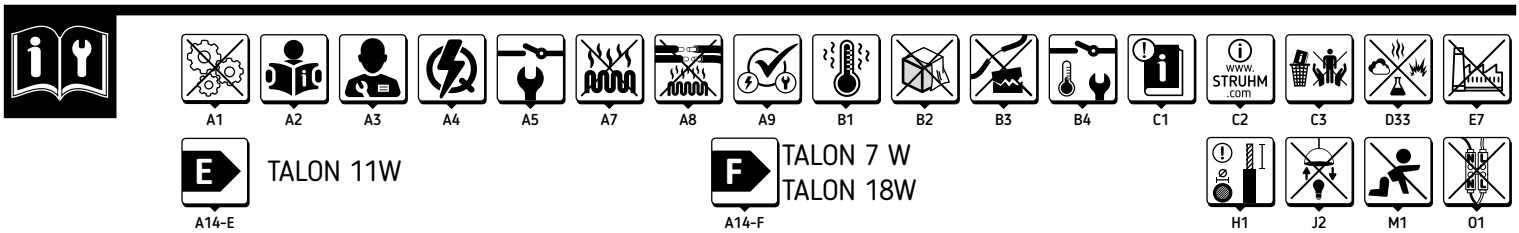

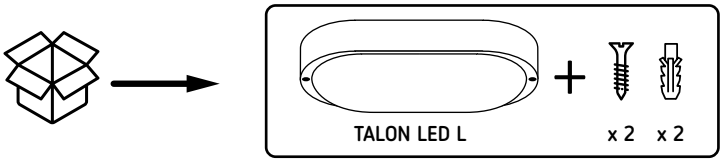

1

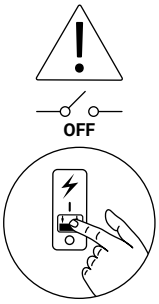

2

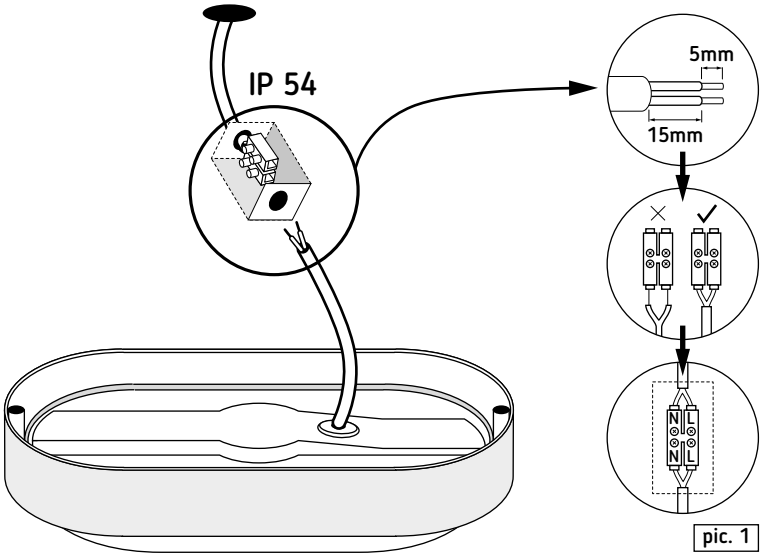

pic. 1

3

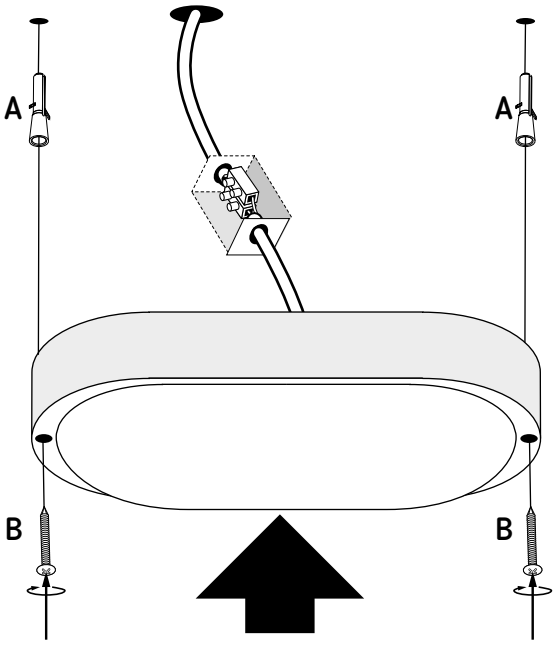

4

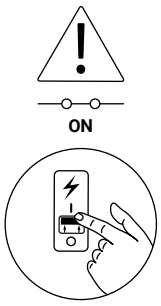

1 → 3 B → 2

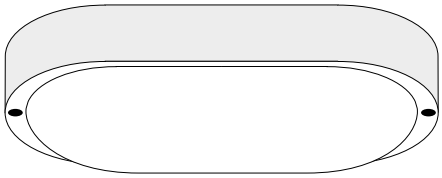

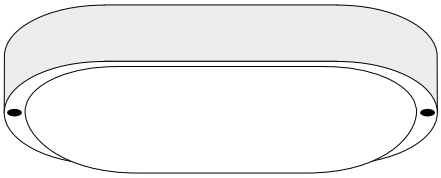
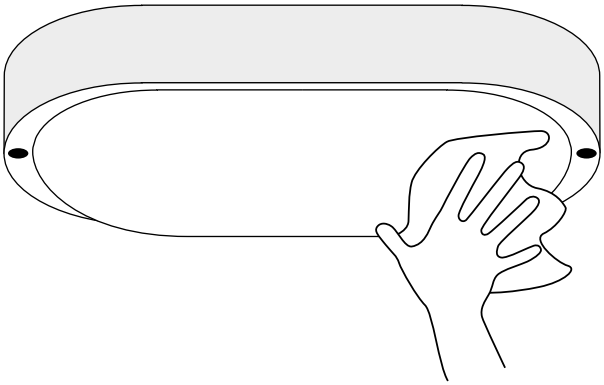
1