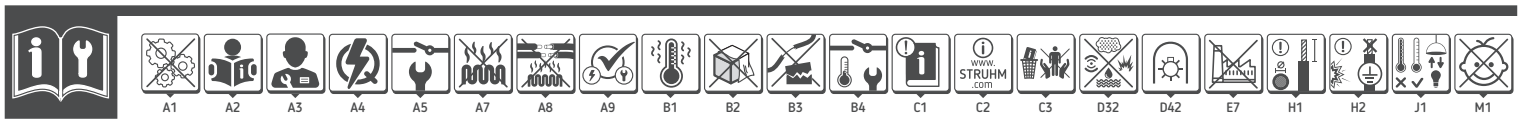
A1
A2
A3
A4
A5
A7
A8
A9
B1
B2
B3
B4
C1
C2
C3
D32
D42
E7
H1
H2
J1
M1

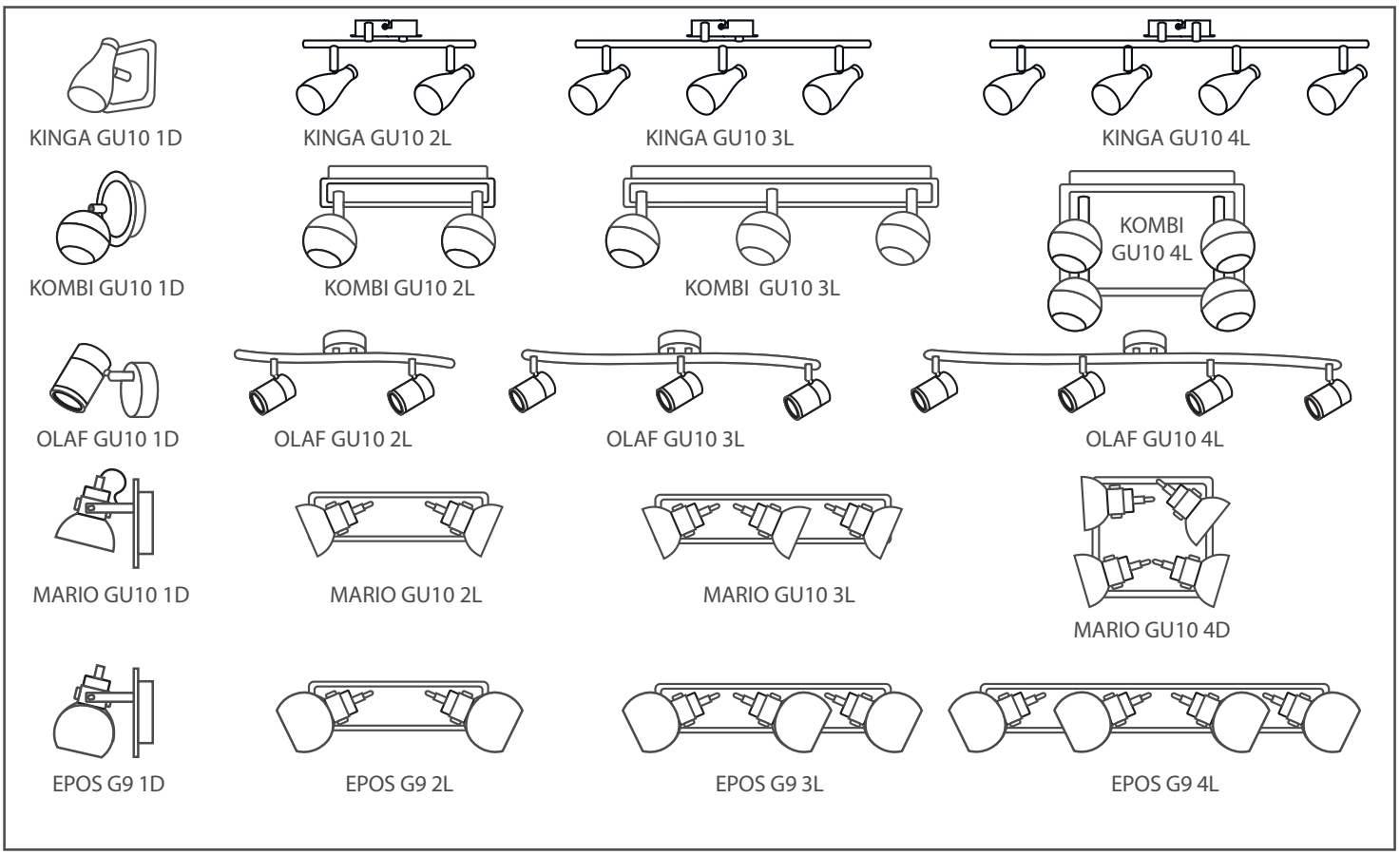
KINGA GU10 1D
KINGA GU10 2L
KINGA GU10 3L
KINGA GU10 4L
KOMBI GU10 1D
KOMBI GU10 2L
KOMBI GU10 3L
KOMBI GU10 4L
OLAF GU10 1D
OLAF GU10 2L
OLAF GU10 3L
OLAF GU10 4L
MARIO GU10 1D
MARIO GU10 2L
MARIO GU10 3L
MARIO GU10 4D
EPOS G9 1D
EPOS G9 2L
EPOS G9 3L
EPOS G9 4L

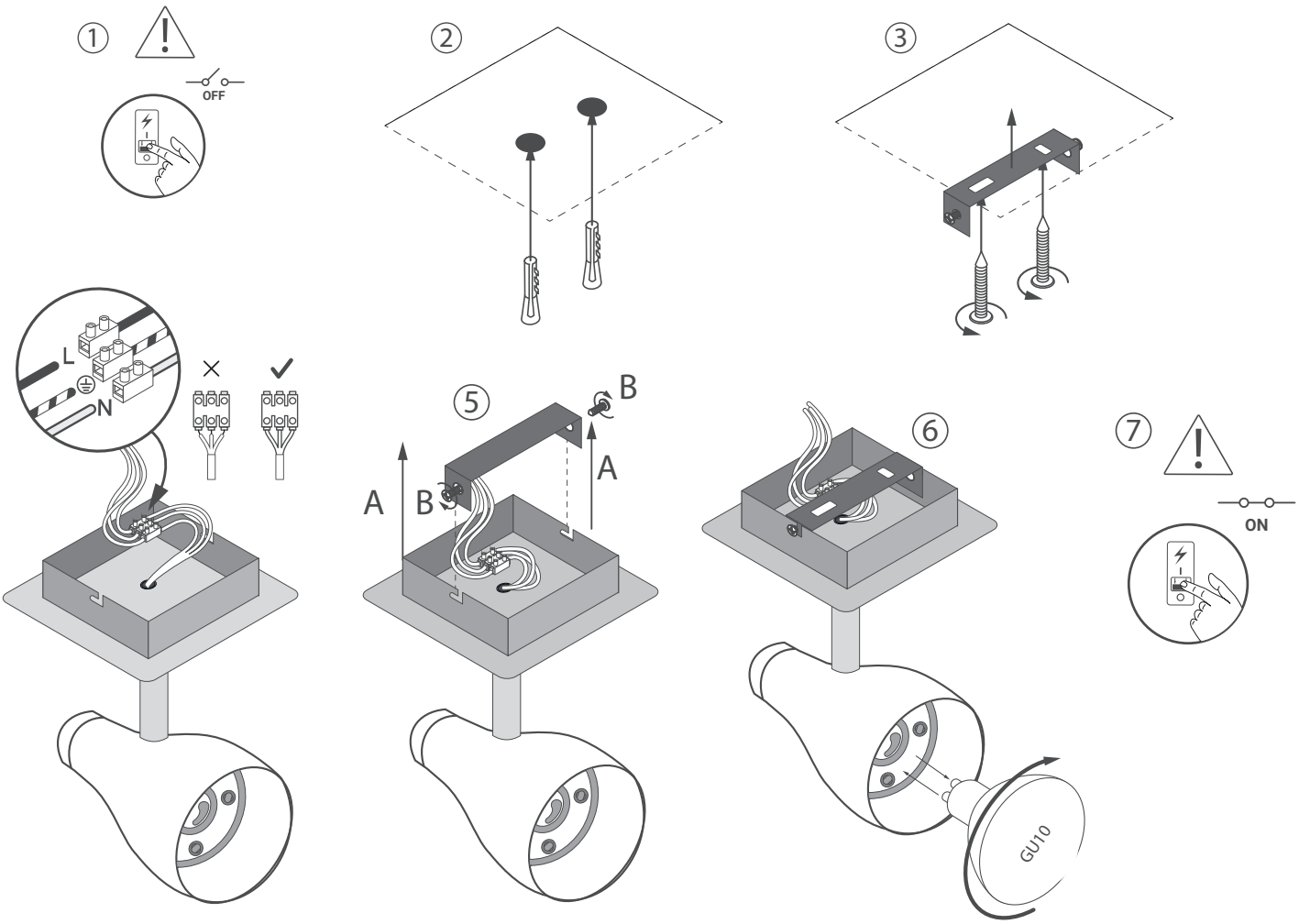
1
OFF
2
3
L
N
5
A
B
B
A
6
GU10
7
ON

A5

1 → 5 B, A → 4 → 3

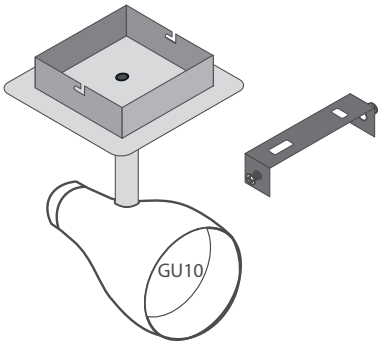

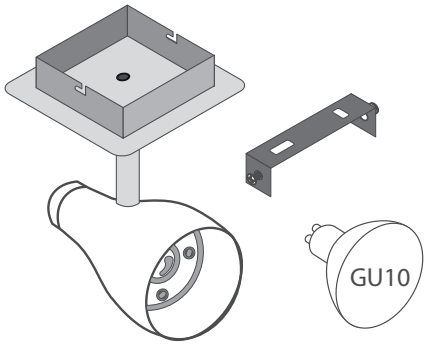

A5 B5 B6 J1

1 → 6
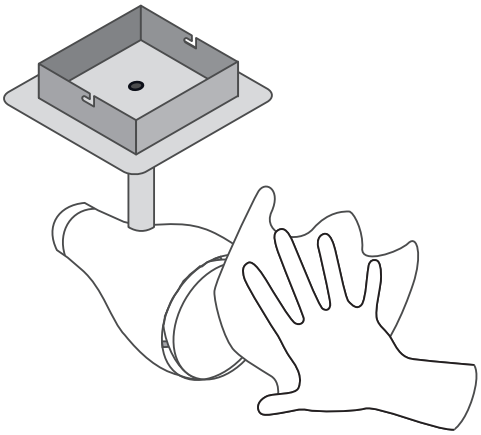
1